Front

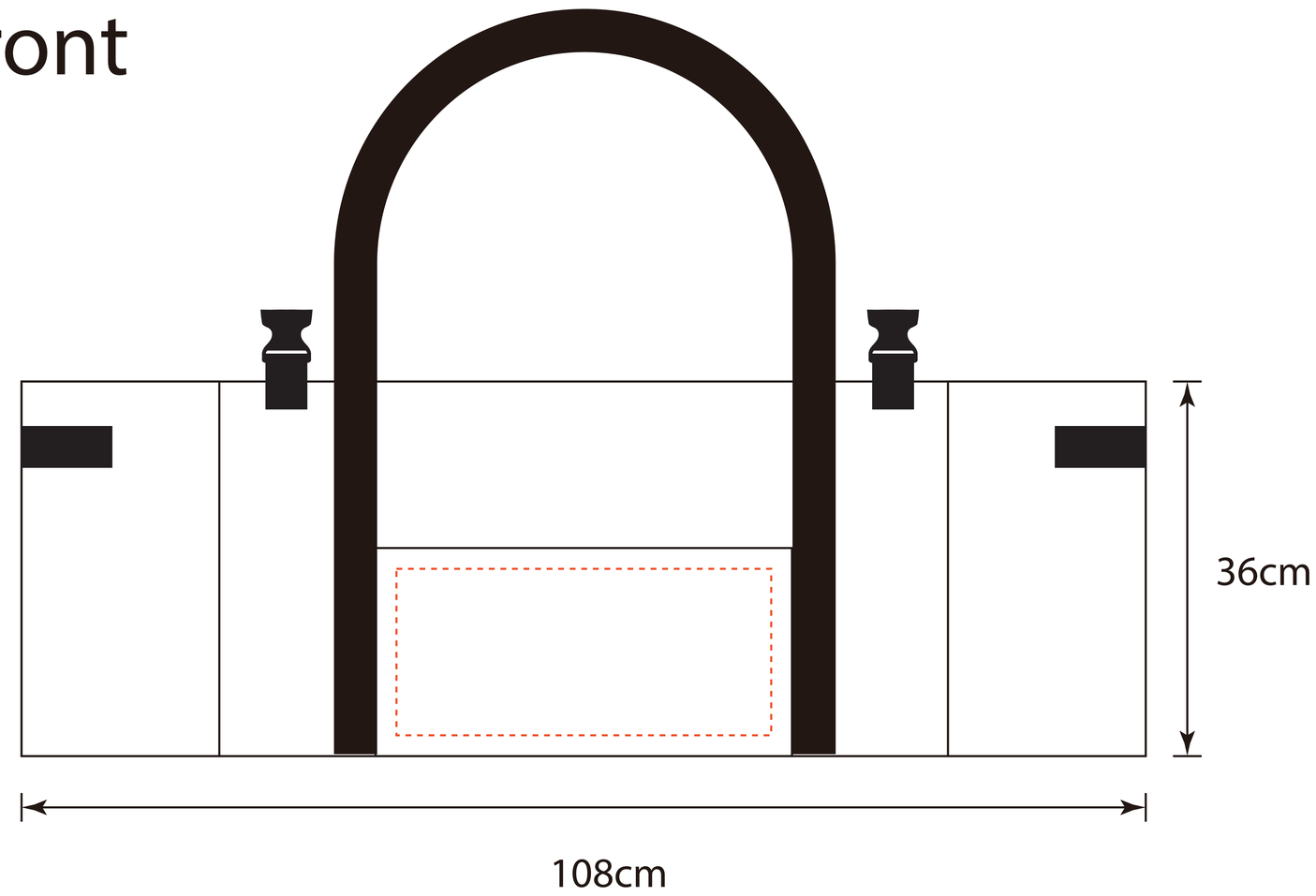

Back

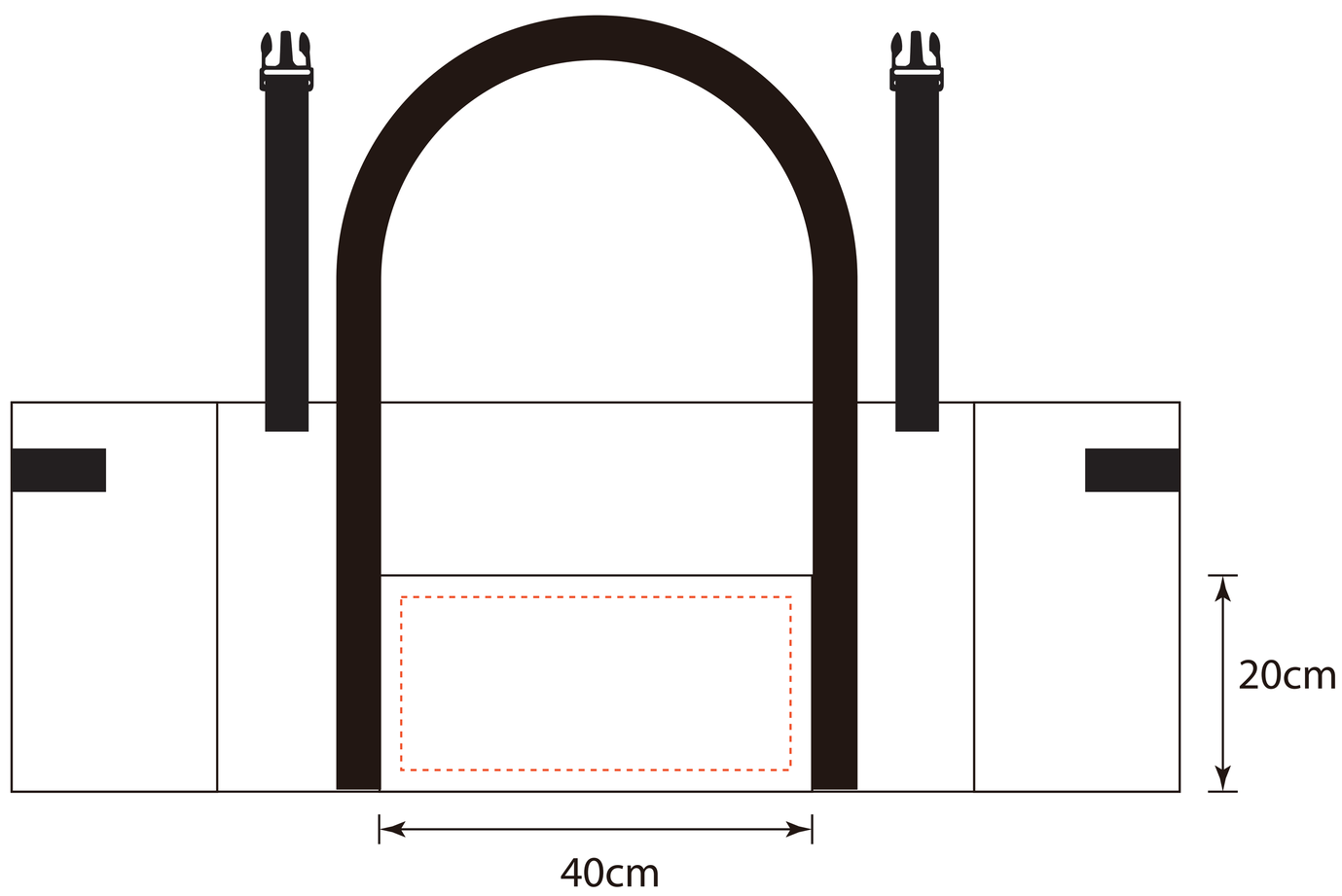

Bottom
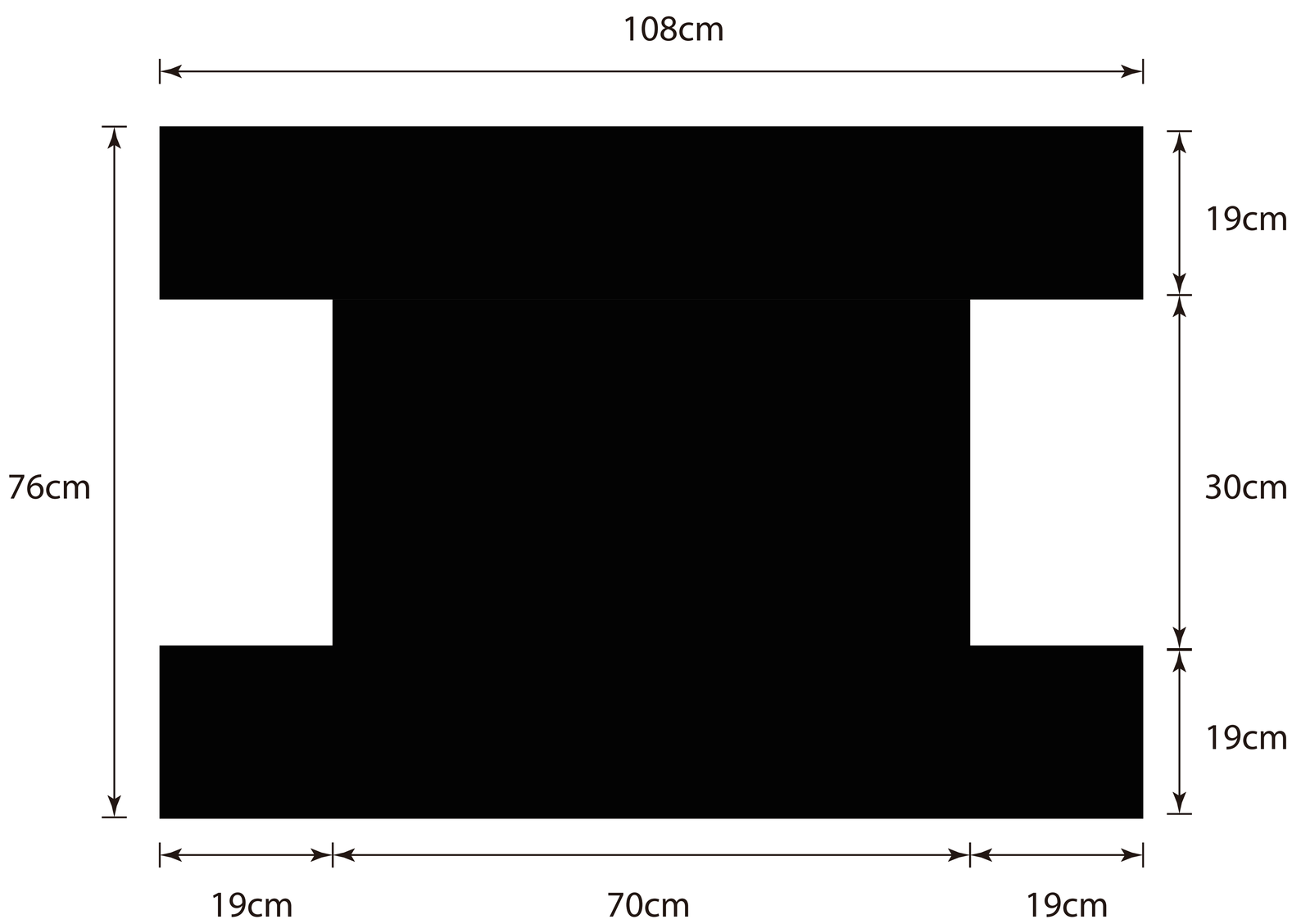
210D 0.5 Ripstop Oxford Waterproof Coated