WP02-70CM

Front

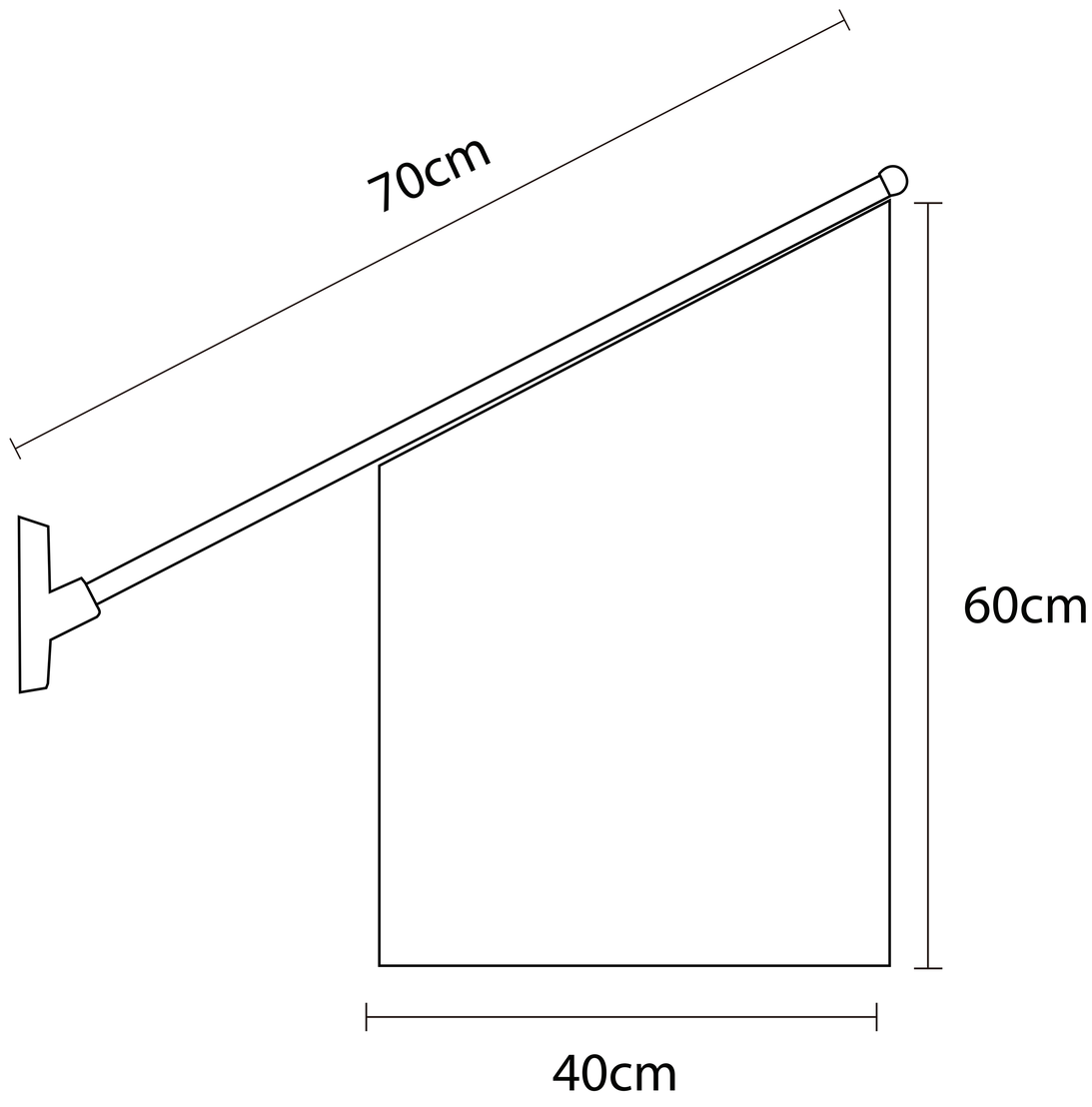
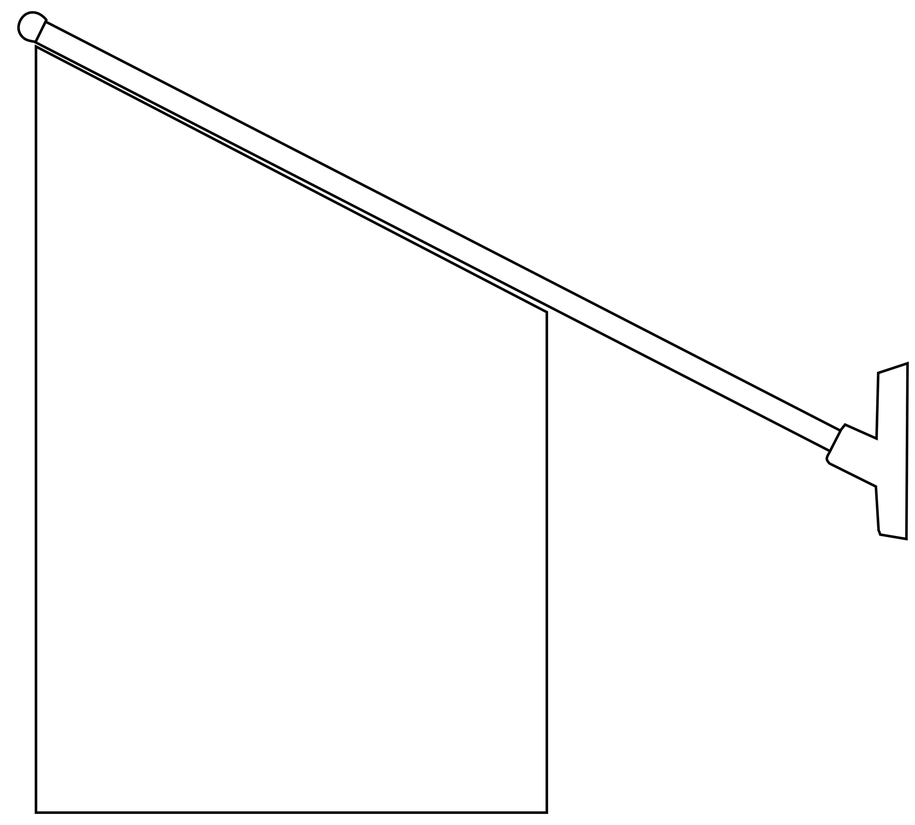
Back