WP01-70CM

Front

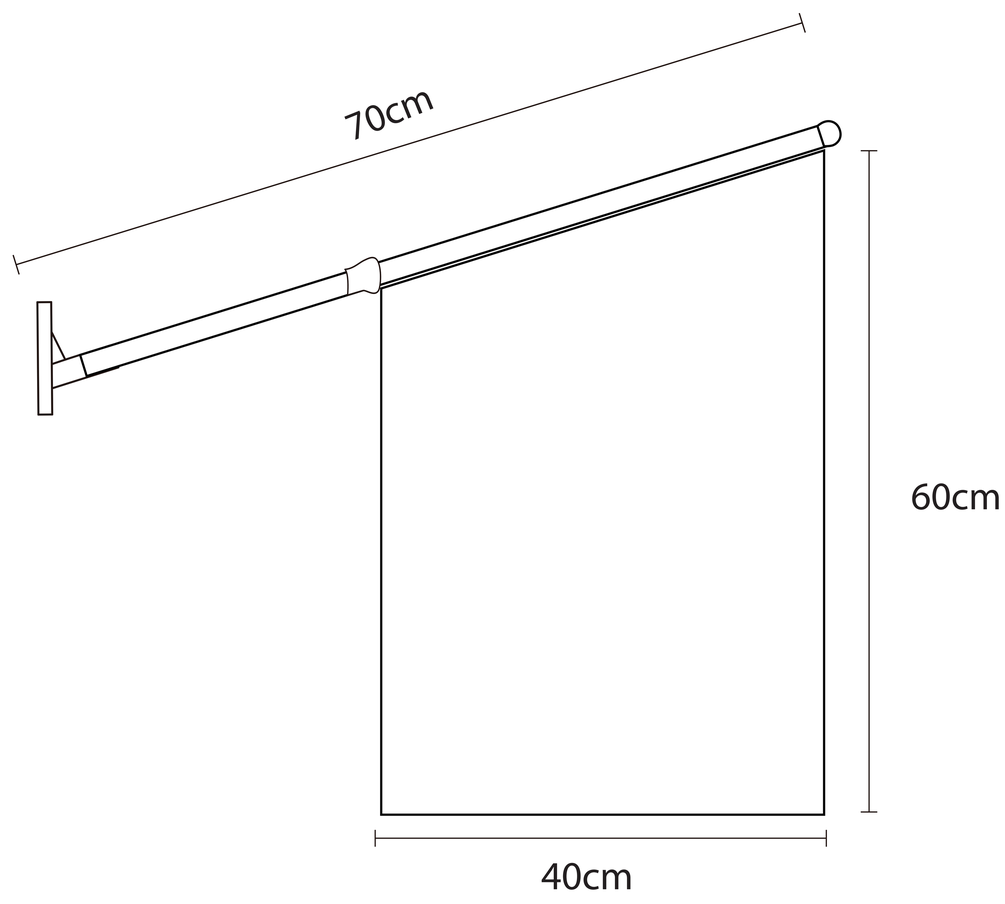
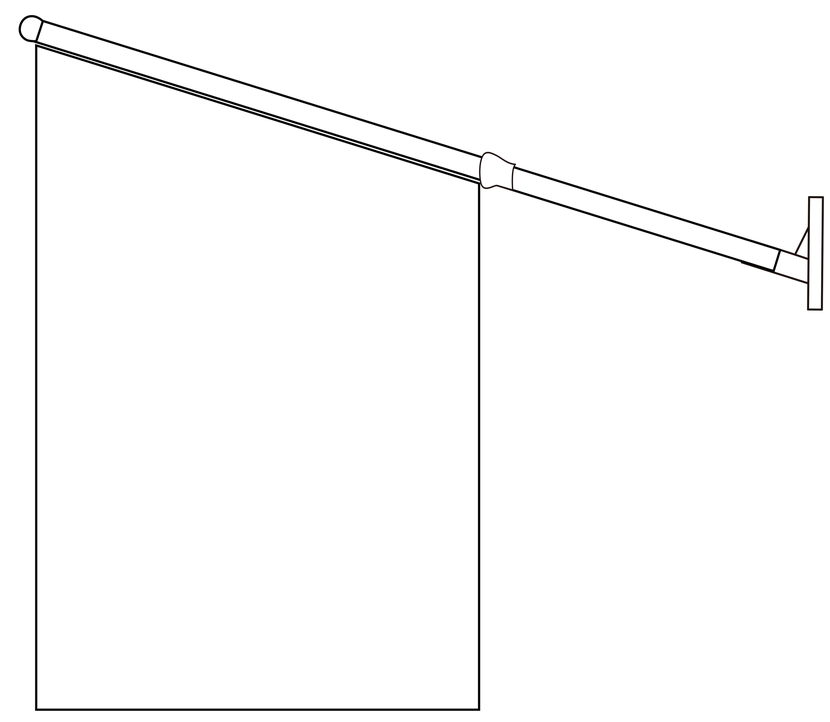
Back