Economy Car Flag-Double

Front

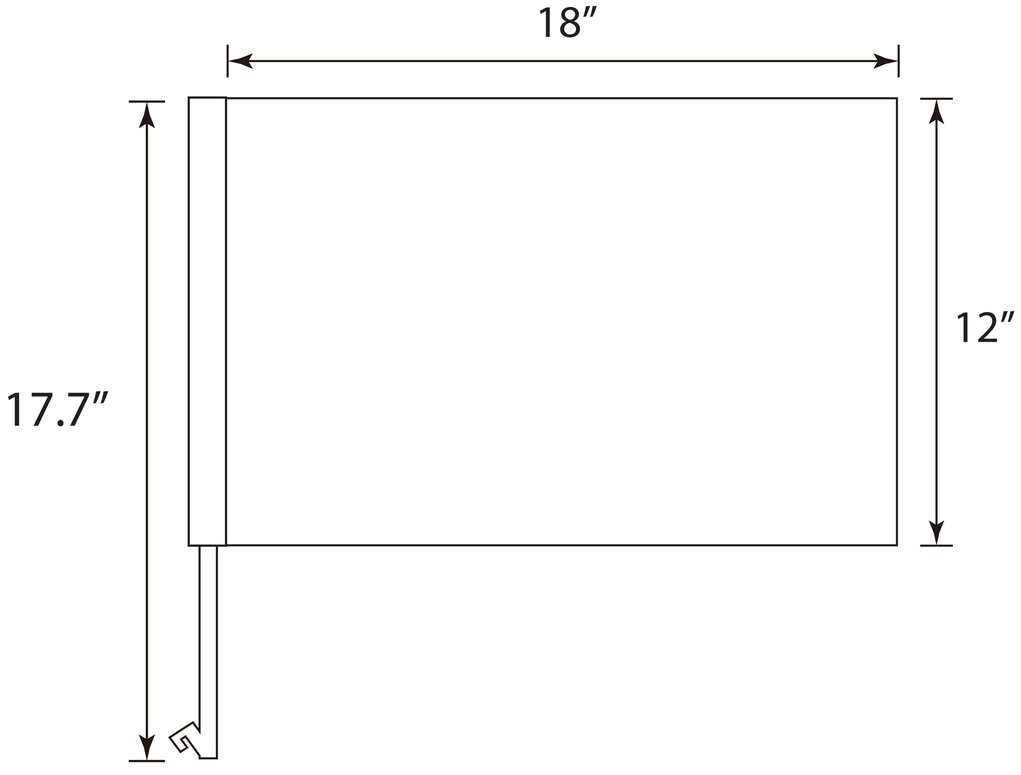
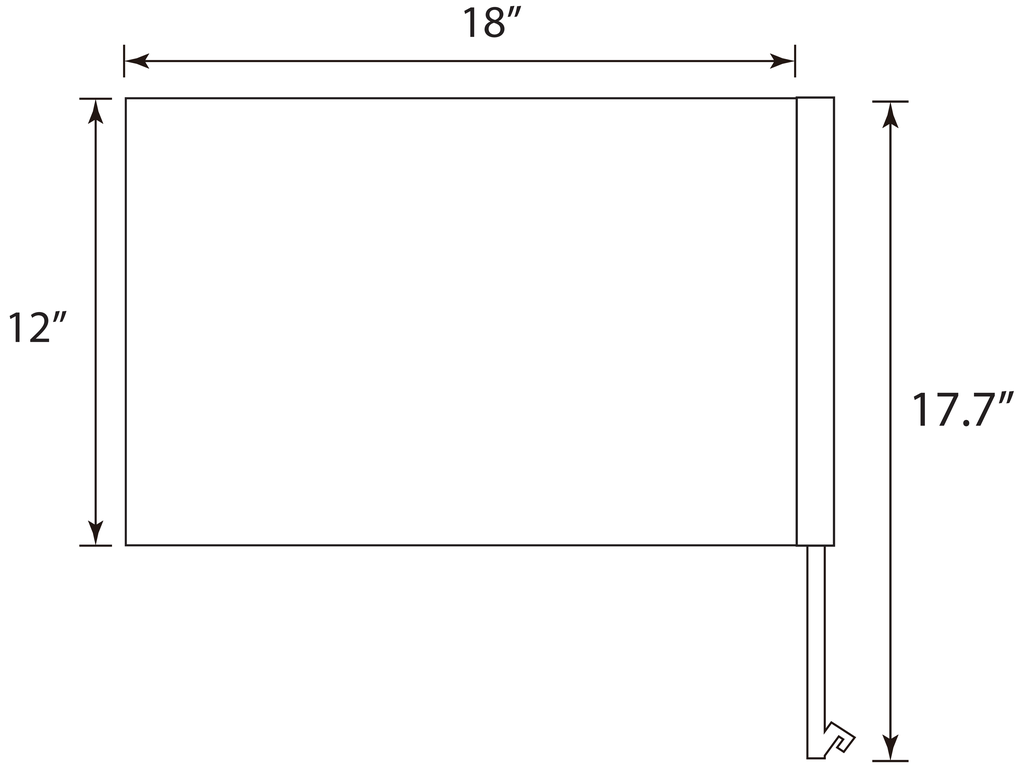
Back