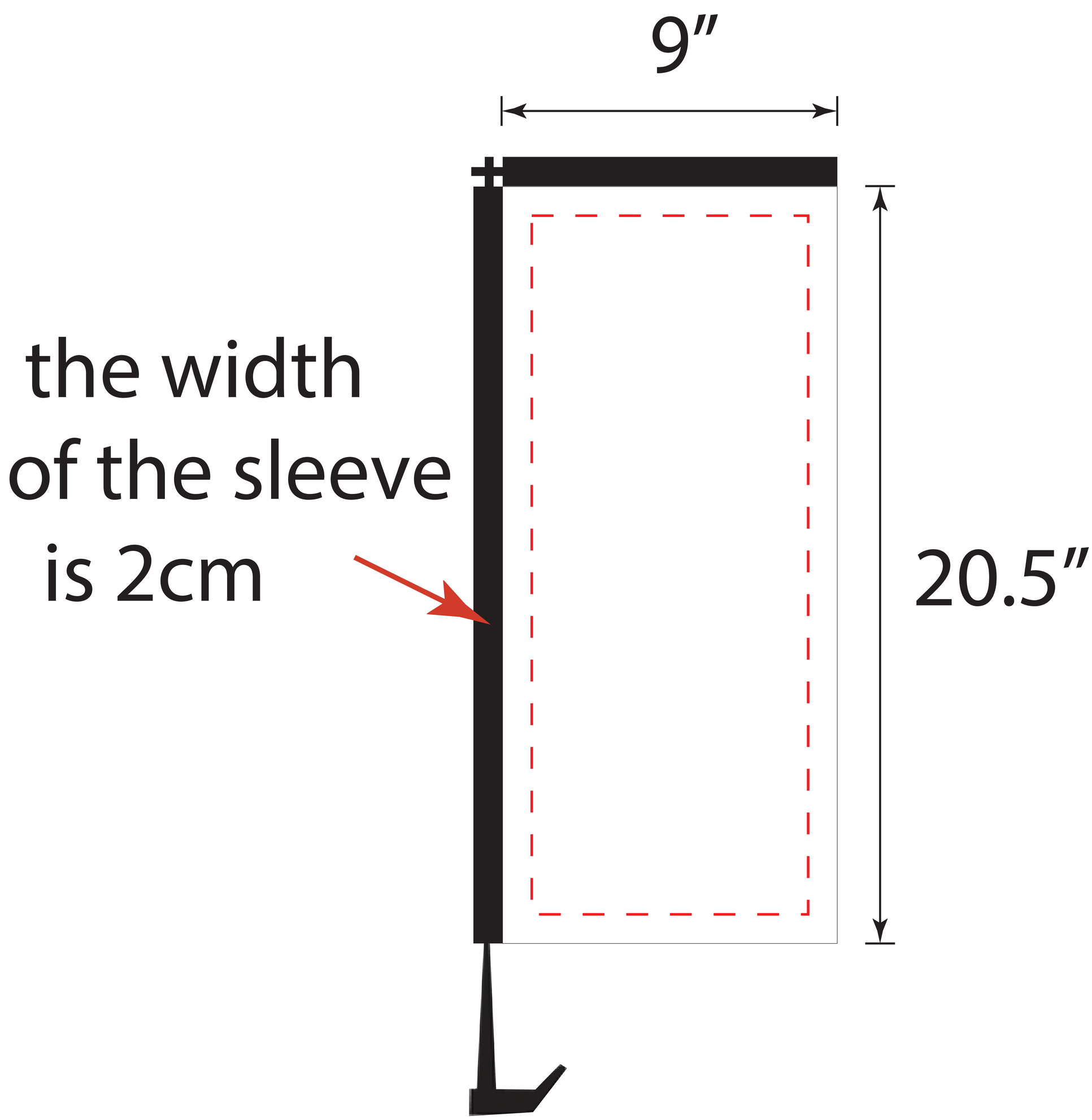
9″
the width
of the sleeve
is 2cm
20.5″