# M

## Front

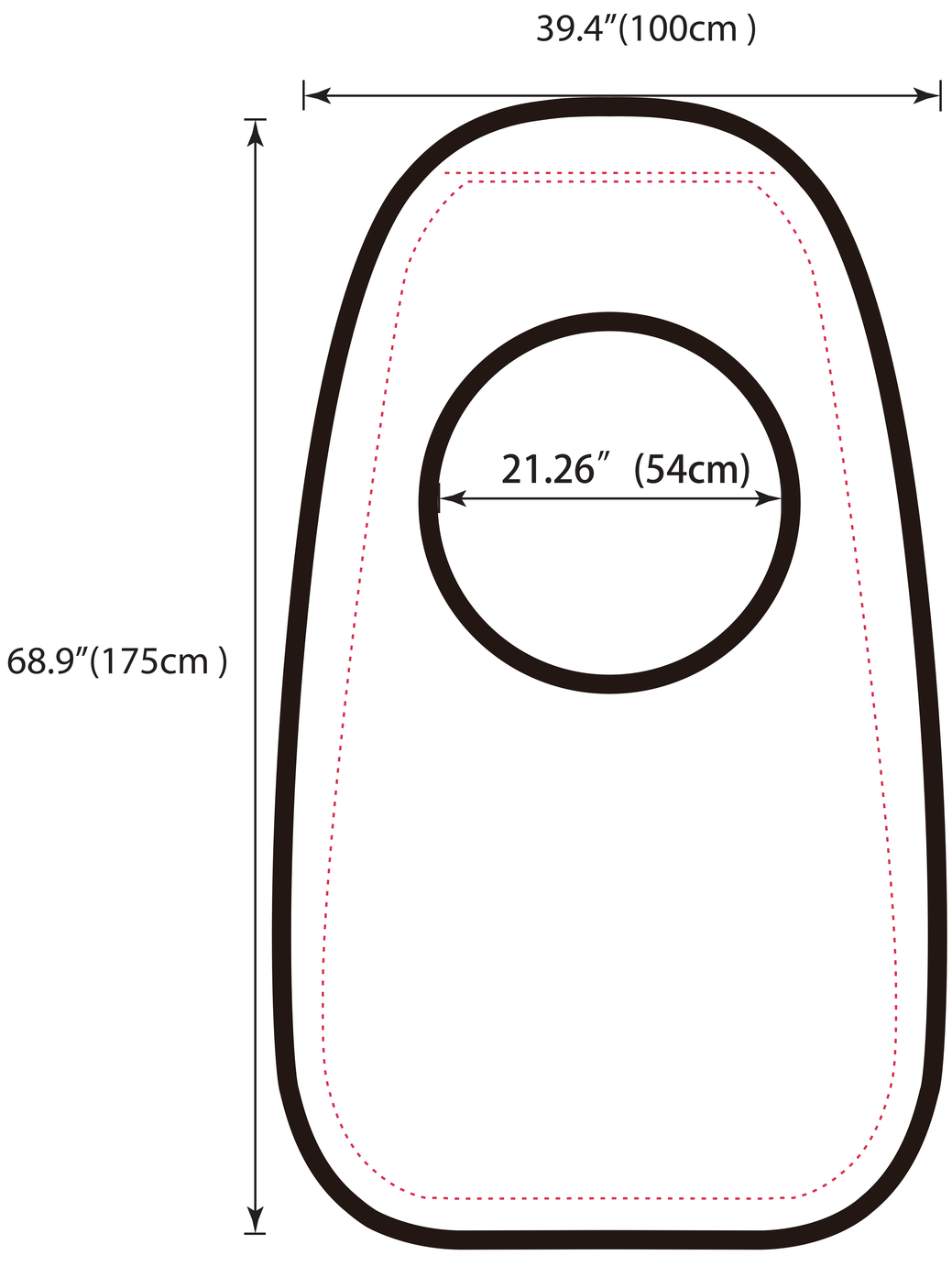

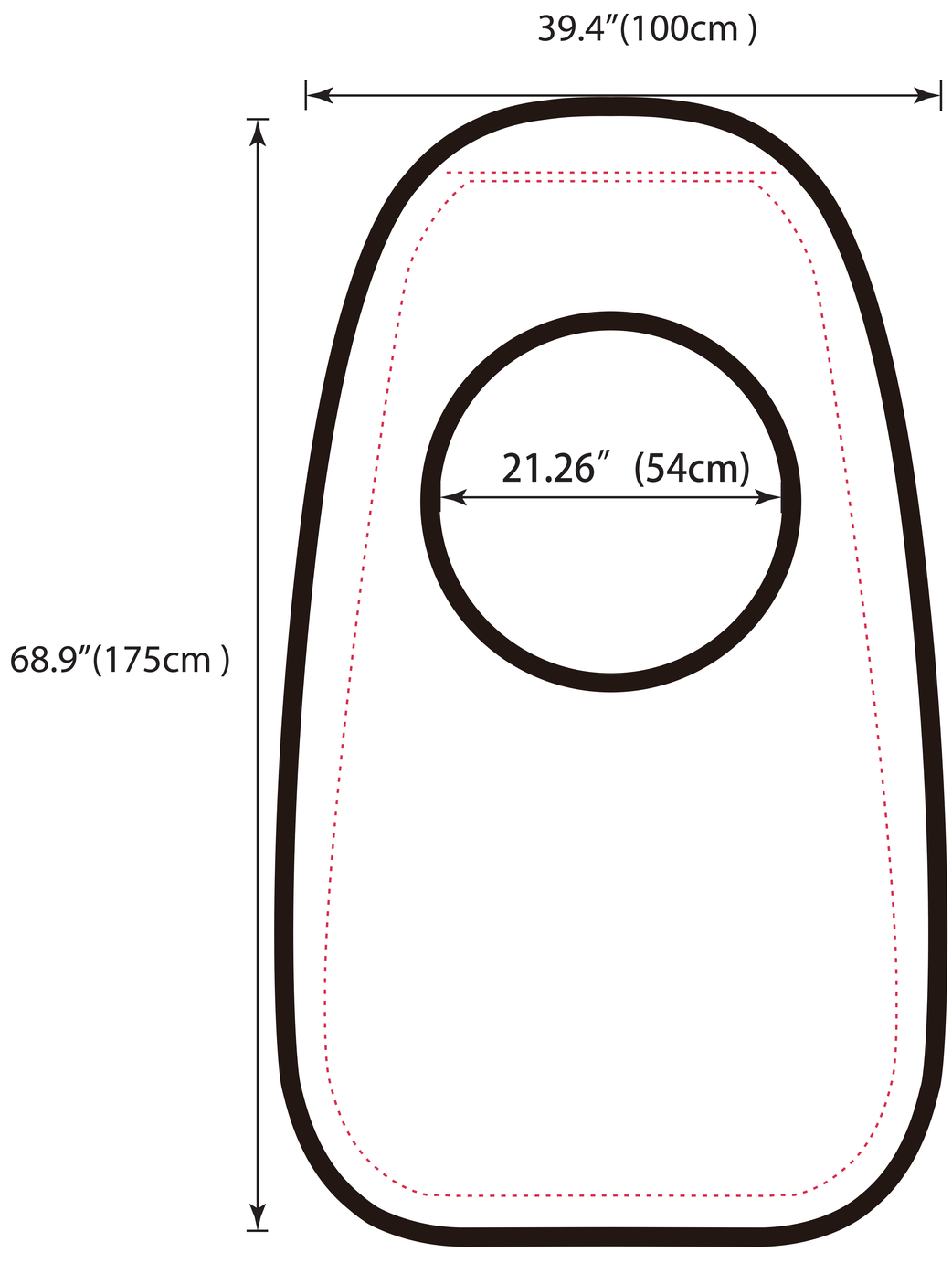
## Back